LARSEN & TOUBRO

MU-2P

Contactors & Relays

L&T SWITCHGEAR

SAFE & SURE

MU-2P Contactors

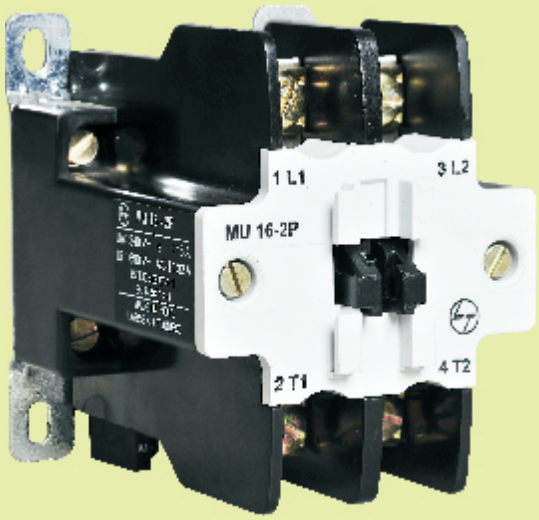

Features
- True 2 pole contactor
- Top mounted relay

Wide Band Molded Coil

Applications
- Single phase pump control
- Single phase motors

Benefits
- Neutral isolation
- Suitable for low voltage condition
- High temperature withstand capability
- Coil protection from humid environment

		MU 16-2P	MU 25-2P	MU 40-2P
Catalogue No.		CS90117	CS90118	CS90119
Conformance to standards		IS/IEC 60947-4-1, IEC 60947-4-1		
No. of poles		2		
Rated operational voltage U_e		240V AC 50Hz		
Rated insulation voltage U_i		690V AC 50Hz		
Rated operation current I_e AC-3 at 240V 50 Hz		16 A	25 A	40A
Rated thermal current I_{th}		32 A	45 A	50 A
Backup fuse rating		40 A	63 A	63 A
Mechanical life	Cycles (million)	5		
Electrical life at 240V, at rated AC-3 current	Cycles (million)	1		
Operations per hour	Mechanical	7200		
	AC-3	750		
Main terminal capicity	Al cable/Al Lug	1 x 16 sq mm		
	Bare conductors	2 x 10 sq mm		
	Multi strand conductors	2 x 6 sq mm		
Service temperature		-5°C to +55°C		
Coil Circuit				
Rated coil voltages	Standard	220V, 240V		
	Wide band coil	160 – 220V		
Coil consumption	Pick up VA	75		
	Hold on VA	13		
	Hold on W	4		
Coil operating band	Pick up	55% - 120% for Standard coil		
		75% - 120% for Wide band coil		
Overall dimension (H X W X D in mm)		82.5 x 64 x 85.8		
Accessories		Top mounted 2 pole add-on		
Spares		Spare coil and Spare kit		

Overall Dimensions

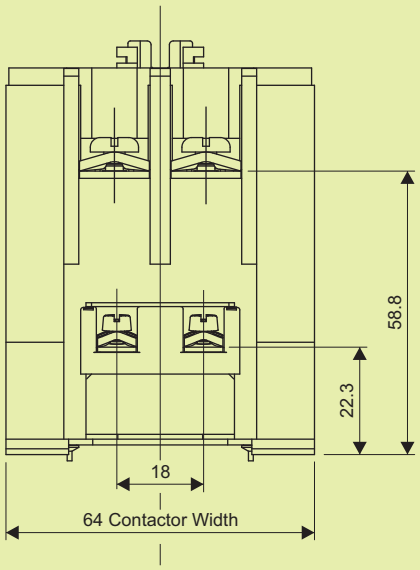

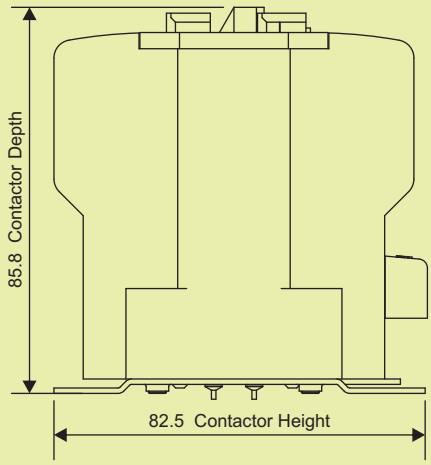

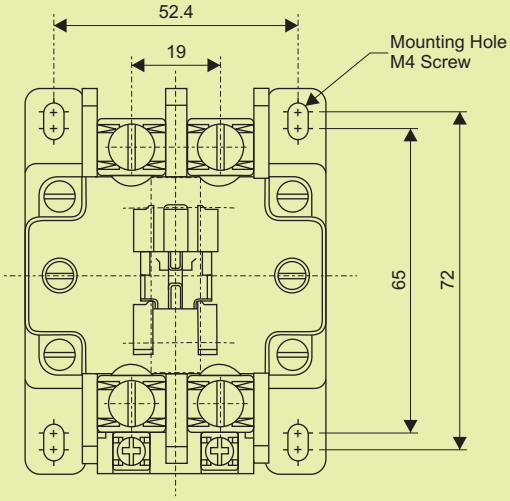

Ordering Information

Description	Catalogue Numbers		
	220V Coil	240V Coil	160-220V Coil
MU 16-2P	CS90117KOOO	CS90117BOOO	CS90117NOOO
MU 25-2P	CS90118KOOO	CS90118BOOO	CS90118NOOO
MU 40-2P	CS90119KOOO	CS90119BOOO	CS90119NOOO
Top add on block			
2 NO	CS90692OOOO		
1 NO + 1 NC	CS90693OOOO		
2 NC	CS90694OOOO		
1 NO	CS90695OOOO		
1 NC	CS90696OOOO		
Spare coil	CS90793KOOO	CS90793BOOO	CS90793NOOO
Spare contact kit			
MU 16-2P	CS90217OOOO		
MU 25-2P	CS90218OOOO		
MU 40-2P	CS90219OOOO		

MU-2P Relay

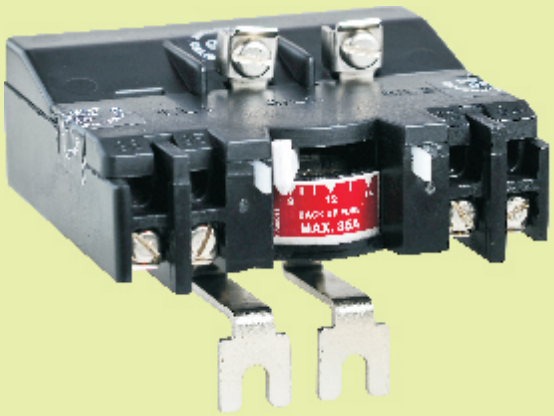

Description	Cat. No.
MU2-2P Relay, 1 - 1.6A	**CS90207OOMO**
MU2-2P Relay, 1.5 - 2.5A	**CS90207OOPO**
MU2-2P Relay, 2.5 - 4A	**CS90207OORO**
MU2-2P Relay, 4 - 6.5A	**CS90207OOTO**
MU2-2P Relay, 6 - 10A	**CS90207OOVO**
MU2-2P Relay, 9 - 14A	**CS90207OOAO**
MU2-2P Relay, 11 - 18A	**CS90207OOCO**
MU2-2P Relay, 13 - 22A	**CS90207OODO**
MU2-2P Relay, 20 - 32A	**CS90207OOEO**
MU2-2P Relay, 26 - 40A	**CS90207OOFO**

Type Designation		MU-2P
Poles		2
Rated insulation voltage (Ui)		690 V
Rated impulse voltage (Uimp)		8 kV
Rated operational current for AC-15 utilization category at 50Hz	24 V	6 A
	110 V	5 A
	220 V	3 A
	415 V	2 A
Controls		Start and Off / Reset
Built in contacts		1NO (Start) and 1NC (Off/Reset)
Trip class		10A
Ambient compensated		Yes
Service temperature		-5°C to +55°C
Short circuit protection device		Fuse link, 63 A type HF
Mounting		Direct with MU-2P contactor
Terminal capacity (Unprepared conductor)	Main	10 mm^2
	Auxiliary	2.5 mm^2
Overall dimensions in mm (H x W x D)		70 x 84 x 82

Product improvement is a continuous process. For the latest information and special applications, please contact CIC to reach our nearest branch office.

L&T SWITCHGEAR
SAFE & SURE

LARSEN & TOUBRO

Larsen & Toubro Limited, Electrical Standard Products
Powai Campus, Mumbai 400 072

Customer Interaction Center (CIC)
BSNL / MTNL (toll free) : 1800 233 5858 Reliance (toll free) : 1800 200 5858
Tel : 022 6774 5858, Fax : 022 6774 5859
E-mail : cic@Lntebg.com / Website www.Lntebg.com

Registered Office: *L&T House, N. M. Marg, Ballard Estate, Mumbai 400 001, INDIA* ***CIN:*** *L99999MH1946PLC004768*